TOA

IP AUDIO INTERFACE IP-A1AF

■DESCRIPTION

The IP-A1AF is a PoE-powered Audio Interface that decodes IP audio streams into analog audio signals. It equipped itself with a built-in 15 W amplifier to drive low-impedance speaker(s) and internal storage, onto which can store up to 20 audio files. Analog audio and control outputs can also be connected to an external amplifier. It supports SIP protocol for integrations with VoIP devices, and its 20 multicast ports are available for group paging operations. It can also receive broadcasts from Video Management Systems using ONVIF. Device control and further system integration is accessed through remote API (HTTP/HTTPS) or local control inputs.

■SPECIFICATIONS

Power Source	PoE+ (IEEE802.3at Class 4), PoE (IEEE802.3af Class 3)
Power Consumption	22 W (at PoE+ powered, rated output) 12.95 W (at PoE powered, rated output) 5 W (IEC62368-1)
Amplifier Rated Output	15 W (at PoE+, powered, 8 Ω) 8 W (at PoE, powered, 8 Ω) Applicable impedance: 8 – 16 Ω
Frequency Response	50 Hz – 20 kHz
Audio Codec	Opus, PCMU (G.711u), PCMA (G.711a), G.722
Audio Delay Time	Min. 100 ms (*1)
Broadcasting Mode	SIP Broadcasting/SIP calling Mode: Opus/PCMU/PCMA/G.722, P2P/SIP Server Connection Multicast Broadcasting Mode: Opus/PCMU/PCMA/G.722 Auto codec recognition, 20 ports VMS Broadcasting Mode: PCMU Internal Message Broadcasting Mode Local Broadcasting Mode: Output from LINE/MIC IN to SPEAKER OUT Note: Each broadcast mode can be assigned an order of priority using the Priority Setting function.
Sound Source Files	Max. 20 files (File storage capacity: 80 MB total) Supported file formats: WAV file: 8/16/44.1/48 kHz sampling frequency, 8/16 bit, monaural/stereo MP3 file: 32/44.1/48 kHz sampling frequency, 64 – 320 kbps, CBR/VBR, monaural/stereo Repeat playback: Playcount (1 – 10 times), Duration (5 – 3600 sec) or Timer (from Start time to End time) Interval time: 0 – 99 sec Delay time: 0 – 99 sec Trigger: Control Input or Remote API (HTTP/HTTPS)
Chime	Pre and post chime tones (applied for Incoming SIP Call and internal audio file broadcast) Preset chime tone ×5, editable tone ×2
Network I/F	100BASE-TX, Auto MDI/MDI-X, RJ45 connector
Network Protocol	IP, TCP, UDP, TLS, HTTP, HTTPS, RTP, SRTP, RTSP, RTCP, SRTCP, ARP, ICMP, IGMPv3, NTP, SIP (RFC3261), SIPS, SIP-TLS, DHCP
Audio Input	1 channel, electronically-balanced, 10 kΩ LINE/MIC selectable (Rated input: LINE: 0 dB (*2), MIC: −60 dB (*2)) PAD function (−20 dB (*2)), Phantom power ON/OFF (12 V DC), volume adjustable removable terminal block (6 pins)
Audio Output	1 channel, electronically-balanced, 600 Ω or less Rated input: 0 dB (*2), removable terminal block (6 pins)
Control Input	2 channels, no-voltage make contact inputs, open voltage: 5 V DC, short-circuit current: 2 mA or less, removable terminal block (6 pins)
Control Output	1 channel, open collector output, withstand voltage: 30 V DC, control current: 150 mA or less, removable terminal block (6 pins)
Indicator	STATUS (green/blue/yellow/red), LINE/MIC IN (green/red), OUTPUT (green), LINK/ACT (green)
Clock Accuracy	±13 seconds per month
Time Adjustment	Manual time setting, Time adjustment by NTP server
Power Outage Protection Period	24 hours (RTC time retention, at 40 °C (104 °F))
Language	English/Japanese
Feature Expansion	Device Connectivity Cloud Service (*3)
Operating Temperature	−30 °C to +55 °C (−22 °F to 131 °F)
Operating Humidity	90 %RH or less (no condensation)
Finish	Front case: Surface-treated steel plate, black, paint Rear chassis: Surface-treated steel plate
Dimensions	126 (W) × 33 (H) × 80 (D) mm (4.96" × 1.3" × 3.15") (excluding projection)
Weight	390 g (0.86 lb)

TOA

IP AUDIO INTERFACE

IP-A1AF

SPECIFICATIONS

Accessory	Removable terminal plug (6 pins, preinstalled on the unit) ···2, Removable terminal plug (2 pins, preinstalled on the unit) ···1, Rubber feet ···4, Mounting screw (M3 × 6) ···4

(*1) When the mode of local broadcasting is set to Normal, assume audio delay time. Audio input can be output with no delay when the mode of local broadcasting is set to No Delay.
(*2) 0 dB = 1 V
(*3) Available only in Japan. A separate service contract is required.
※ ONVIF is a registered trademark of ONVIF Inc.

※ These specifications apply to the firmware version 3.6.0 or later. For the latest specifications and firmware, please refer to the TOA DATA Library (https://www.toa-products.com/international/).

Personal Computer Requirements

Display	1920 × 1080 resolution or greater
OS	Windows 10 Pro (64-bit edition) Windows 10 Home (64-bit edition) Windows 11 Pro Windows 11 Home
Required Web Browser	Google Chrome Microsoft Edge

※ Windows and Microsoft Edge are registered trademarks of Microsoft Corporation in the United States and other countries.
※ Google Chrome is the trademark of Google LLC in the United States and other countries.
※ Other company names and products are also trademarks of individual companies.

APPEARANCE

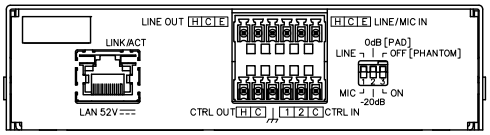

Rear View

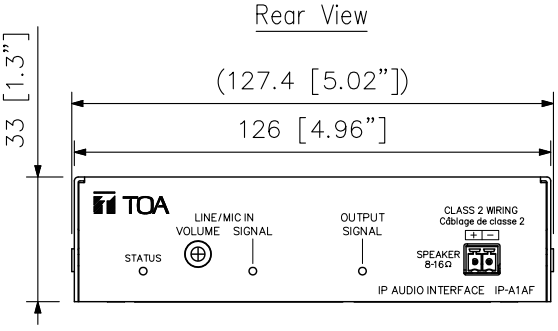

Front View

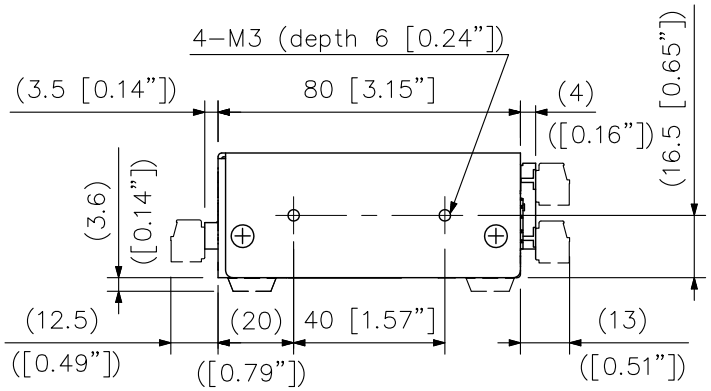

Side View
(with accessories)

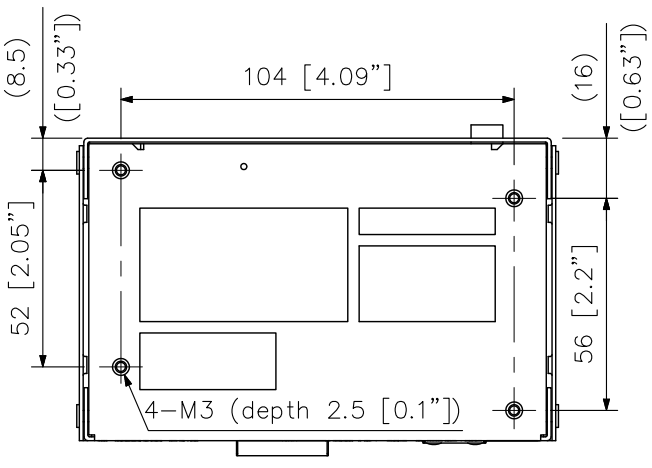

Top View

UNIT: mm SCALE: 1/2

Note: Numerical values in parentheses are for reference only.

TOA Corporation

DWG No: GIP00HC1-3